# GASAPPROVED BALL VALVE WITH STEEL HANDLE

## TYPE 1010

**GENEREL**

| | |
|---|---|
| DIMENSION/PRESSURE: | 3/4" TO 1" = PN 40 |
| | 1 1/4" = PN 30 |
| | 2" = PN 25 |
| PRESSURE AT GAS: | PN 5 |
| | MOP 5 (EN 331) |
| MATERIAL: | NICKEL PLATED BRASS MS58 |
| THREAD: | BSPT - BS 21 |
| HANDLE: | GALVANIZED STEEL |
| APPROVALS: | DVGW |
| MEDIA: | ALL TYPES OF: TOWN GAS, NATURAL GAS, L.P.G. GAS |

**OPTION**

| | |
|---|---|
| CONNECTION: | MALE/FEMALE |
| HANDLE: | T-HANDLE |

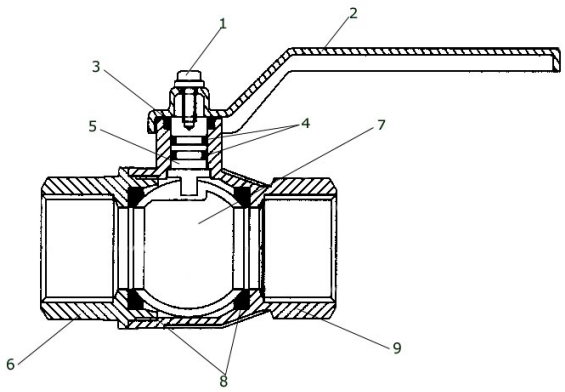


| POS | DESCRIPTION | MATERIAL |
|---|---|---|
| 1 | SCREW | GALVANIZED STEEL |
| 2 | HANDLE | GALVANIZED STEEL |
| 3 | O-RING | NBR |
| 4 | O-RING | FPM |
| 5 | STEM | BRASS MS58 |
| 6 | THREAD ENDS | NICKELPLATED BRASS MS58 |
| 7 | BALL | HARD CROMED BRASS MS58 |
| 8 | SEAT | PTFE |
| 9 | BODY | NICKELPLATED BRASS MS58 |

## DESCRIPTION

- **Nickel-plated brass ball valve** with a very nice surface structure.
- **Full bore** provides a minimal pressure drop through the ball valve.
- **The stem has an O-ring sealing of FPM.**
- **Robust ball valve** with extra heavy wall thickness/threaded bottom.
- **Complete identification** molded into the ball valve.
- **The stem is blow-out proof,** which also gives the benefit of increasing the stem sealing when pressure rises.
- **Handle in galvanized steel** with a yellow painted surface.
- **DVGW** approval.

DS-1010-UK-06-2016-REV. C
We reserve the right for changes.

Dansk Ventil Center A/S
Ferrarivej 14
DK - 7100 Vejle
Tel.: +45 75 72 33 00
Fax: +45 75 72 75 15
E-mail: mail@dvcas.dk
Web: www.dvcas.dk

## DIMENSION

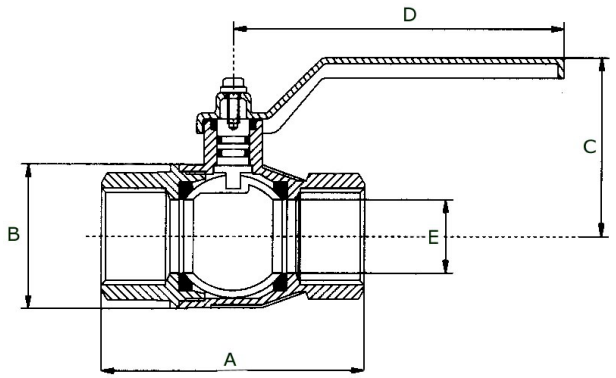


| DIMENSION | | VALVE WITH HANDLE | | | | |
|---|---|---|---|---|---|---|
| [MM] | [INCH] | A [MM] | B [MM] | C [MM] | D [MM] | E [MM] |
| DN08* | 1/4″ | 49,5 | 23,5 | 37 | 80 | 10 |
| DN10* | 3/8″ | 52,4 | 24 | 37 | 80 | 10 |
| DN15* | 1/2″ | 75 | 32,5 | 50 | 89 | 15 |
| DN22 | 3/4″ | 80 | 42,0 | 59 | 113 | 20 |
| DN25 | 1″ | 90 | 49,5 | 63 | 113 | 25 |
| DN32 | 1 1/4″ | 110 | 59,5 | 77 | 138 | 32 |
| DN40* | 1 1/2″ | 120 | 72,0 | 91 | 158 | 40 |
| DN50 | 2″ | 140 | 86,0 | 97 | 158 | 50 |

* Replaced by Type 1011

## PRESSURE/TEMPERATURE

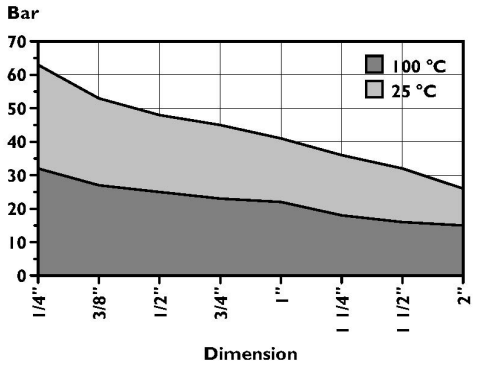


## VALVE DATA

| DIMENSION | | QTY. PER BOX | WEIGHT |
|---|---|---|---|
| [MM] | [INCH] | [PC] | [KG] |
| DN08* | 1/4″ | 12 | 0,15 |
| DN10* | 3/8″ | 12 | 0,27 |
| DN15* | 1/2″ | 12 | 0,27 |
| DN22 | 3/4″ | 8 | 0,41 |
| DN25 | 1″ | 6 | 0,57 |
| DN32 | 1 1/4″ | 4 | 0,90 |
| DN40* | 1 1/2″ | 2 | 1,28 |
| DN50 | 2″ | 2 | 1,92 |

* Replaced by Type 1011