PTFE LINED BUTTERFLY VALVE

TYPE E4930

GENERAL

DIMENSIONS/PRESSURE:	DN40 - DN600 = PN10
VACUUM SERVICE:	-0,1BAR
MATERIAL BODY:	GGG40.3
MATERIAL DISC/STEM:	DUPLEX, AISI 316L (SEE TABLE BELOW)
MATERIAL SEAT:	PTFE (FDA) ON SILICONE BACKUP RING
SURFACE:	EPOXY COATING C2, 120M
FACE-TO-FACE:	EN558-1 SERIES 20
OPERATION:	FREE STEM
COUNTER FLANGES:	DN40-DN150, PN10/16/ANSI 150 DN200-DN600, PN10/ANSI 150
APPROVALS:	EN12266-1/P12 LEAKAGE RATE A, CE 97/23/EG, TA LUFT

OPTIONS

OPERATION:	HANDLE, GEAR, ACTUATOR (PNEUMATIC/ELECTRIC)
DIMENSIONS:	DN700 - DN1000 ON REQUEST
COUNTER FLANGES:	JIS 10K, AS-2129 TABEL D, AS-2129 TABEL E, SANS 1123-1000/3
MATERIAL BODY:	1.4301, CARBON STEEL
MATERIAL DISC:	1.4404, 1.4408, 1.4409, 1.4581, PFAC, POLISHED STAINLESS, TITANIUM GRADE 2, HASTELLOY C22
MATERIAL SEAT:	TFM (FDA), TFM COND., UHMPE
MATERIAL BACKUP RING:	FPM, EPDM, FPM (FDA)

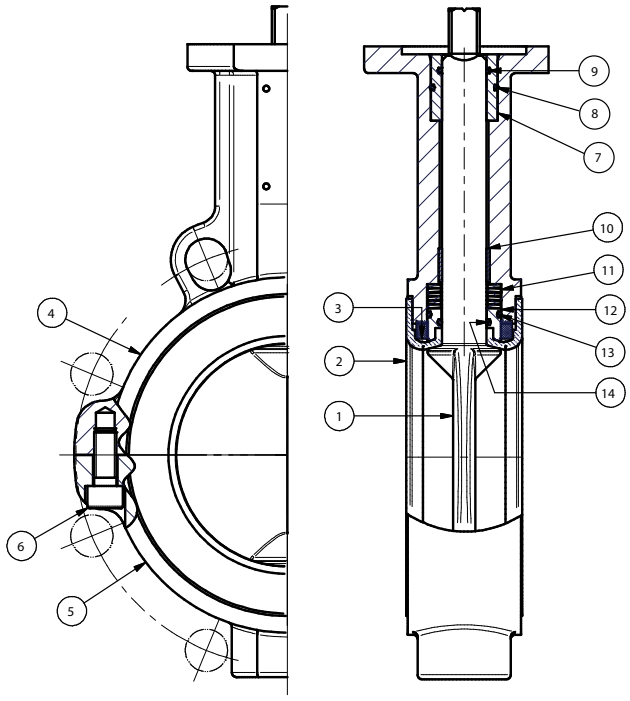

POS	DESCRIPTION	MATERIALS
1	DISC (DN40-200)	1.4469 DUPLEX
1	DISC (DN250-600)	1.4404 AISI 316L
1	SHAFT (DN40-200)	1.4469 DUPLEX
1	SHAFT (DN250-600)	1.4462 DUPLEX
2	LINER	PTFE (FDA APPROVED)
3	BACKUP RING	SILICONE
4	BODY UPPER PART	GGG40.3
5	BODY LOWER PART	GGG40.3
6	BOLT	STEEL 12.9, ZINC PLATED
7	BUSHING	POM
8	O-RING	FPM
9	O-RING	FPM
10	BUSHING	STEEL/PTFE
11	SPRING WASHER	SPRING STEEL
12	PRESSURE PLATE	1.4404 AISI 316L
13	O-RING	FPM
14	O-RING	FPM

DESCRIPTION

- **High quality industrial butterfly valve**, EN 10204 3.1 certificate, CE/PED and Option: ATEX (zone 0, 1, 2 and 20, 21, 22)
- **PTFE liner on flexible silicone backup ring** ensures perfect tightness at full differential pressure.
- **Extensive choice of materials** provides for many applications.
- **One-piece stem and disc design** ensures perfect rotation with no slug.
- **ISO 5211 mounting flanges** and 45° square stem enables direct mounting of actuators without the use of bracket or coupling.
- **Bearing and pressurepackages** reduces friction, prolongs service life and ensures a TA-Luft approved stem packing.
- **Self-centering solution during mounting** covers several flange standards.
- **2-pcs. body construction** makes it possible to replace liner.

DS-E4930-UK-03-2020-REV. C
We reserve the right for changes.

Dansk Ventil Center A/S | Ferrarivej 14 DK - 7100 Vejle | Tel.: +45 75 72 33 00 Fax: +45 75 72 75 15 | E-mail: mail@dvcas.dk Web: www.dvcas.dk

DIMENSIONS

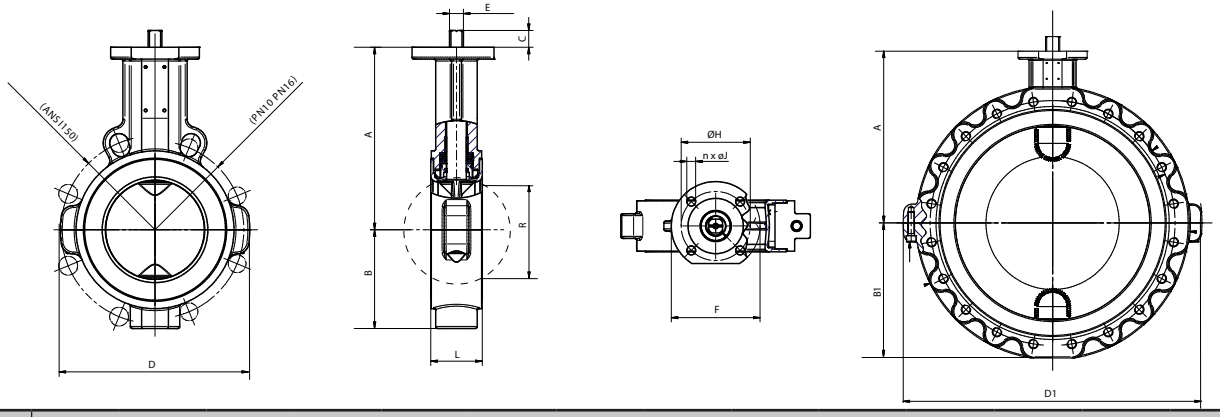

DIM	BUTTERFLY VALVE													
[MM]	A [MM]	B [MM]	B1 [MM]	C [MM]	D [MM]	D1 [MM]	E [MM]	ØF [MM]	ØH [MM]	N X ØJ [MM]	L [MM]	R [MM]	ISO	WEIGHT [KG] FREE STEM
DN40	94	NA	53*	17.0	142.0	142.0*	9	65	50	4 X 7	33	34.0	F05	1.5
DN50	130	56.0	NA	17.0	104.0	NA	11	102	70	4 X 9	43	31.0	F07	3.0
DN65	146	67.0	NA	17.0	122.0	NA	11	102	70	4 X 9	46	48.0	F07	4.0
DN80	165	84.0	NA	17.0	144.0	NA	11	102	70	4 X 9	46	63.0	F07	5.0
DN100	185	100.0	NA	17.0	164.0	NA	14	102	70	4 X 9	52	90.0	F07	6.3
DN125	202	110.0	NA	17.0	194.0	NA	14	102	70	4 X 9	56	118.0	F07	7.7
DN150	217	125.0	NA	22.0	220.0	NA	17	102	70	4 X 9	56	137.0	F07	10.0
DN200	245	158.0	NA	26.0	274.0	NA	19	152	102	4 X 11	60	189.0	F10	16.5
DN250	270	190.0	NA	30.0	330.0	NA	22	152	102	4 X 11	68	239.0	F10	24.5
DN300	308	225.0	NA	30.0	380.0	NA	22	152	102	4 X 11	78	290.0	F10	37.0
DN350	330	NA	256.0*	37.0	NA	571.0*	27	152	125	4 X 13	78	328.0	F12	87.0
DN400	365	NA	292.0*	37.0	NA	643.0*	27	152	125	4 X 13	102	377.0	F12	107.0
DN450	400	NA	311.0*	50.0	NA	684.0*	36	175	140	4 X 17	114	417.0	F14	152.0
DN500	435	NA	340.0*	50.0	NA	745.0*	36	175	140	4 X 17	127	477.0	F14	185.0
DN600	510	NA	398.0*	64.0	NA	863.0*	46	210	165	4 X 21	154	560.0	F16	254.0

* LUG style - tap holes drilled through

DIM [MM]	MAX TORQUE [NM]	KV-VALUE (M3/H AT 1 BAR ΔP) 90°
DN40	15	136
DN50	30	193
DN65	35	266
DN80	45	392
DN100	60	585
DN125	80	1015
DN150	110	1495
DN200	190	3050
DN250	300	4510
DN300	400	6500
DN350	450	8760
DN400	500	11350
DN450	600	14400
DN500	650	18000
DN600	750	29200

Flow Curve

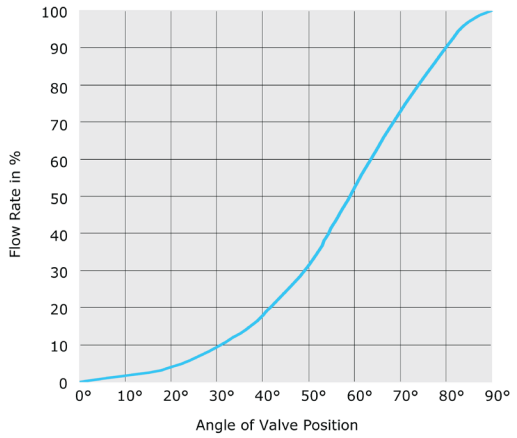

SEAT - INFO

ADVANTAGES OF TFM LINER (OPTION)
TFM is manufactured with PTFE and 1% fraction of perfluoropropyl vinyl ether (PPVE). While the properties of conventional PTFE (excellent all-round chemical resistance, application in a wide service temperature range and extreme resistant to embrittlement or aging) will be conserved, the additive PPVE leads to a better allocation og the PTFE particles and thus to a higher density of the molecular structure. The following extra advantages are:

-Cold flow, measured as deformation under load is significantly lower for TFM than for conventional PTFE: It is about the same value as conventional PTFE with 25% glass fibre.
-Reduced permeation leads to better barrier properties.
-The smooth surface provokes only a slight abrasion of the liner and less articles in the medium.

PRESSURE/TEMPERATURE

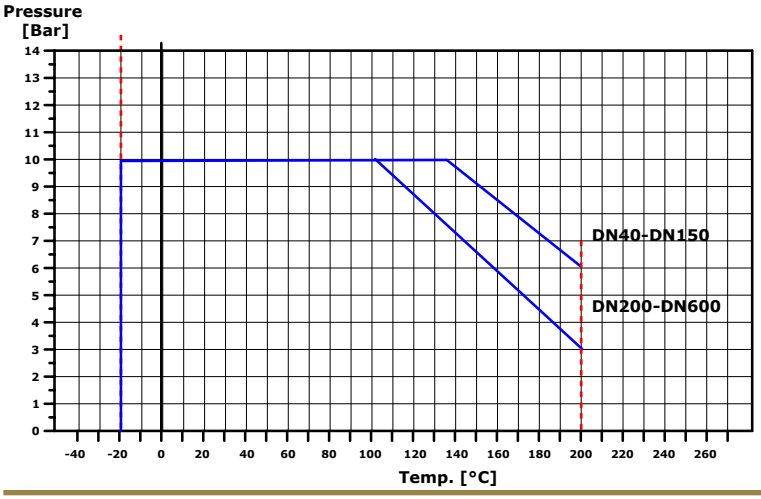

INSTALLATION

Basics
It is absolutely forbidden to mount the butterfly valve between flanges which are not positioned parallel to each other. The axis of the pipes and valves have to be aligned. Furthermore it is prohibited to weld on the pipe while the butterfly valve is mounted between the flanges. This would destroy the liner of the valve.

Recommended Locking Torques of the Flange Screws
The PTFE material of the liner tends to cold flow. Therefore the following maximum locked torques have to be applied. Tighten evenly in star pattern:

DN40	25Nm	DN250	95Nm
DN50	35Nm	DN300	105Nm
DN65	40Nm	DN350	145Nm
DN80	45Nm	DN400	165Nm
DN100	50Nm	DN450	185Nm
DN125	60Nm	DN500	215Nm
DN150	70Nm	DN600	230Nm
DN200	85Nm		

Dansk Ventil Center A/S
Ferrarivej 14
DK - 7100 Vejle
Tel.: +45 75 72 33 00
Fax: +45 75 72 75 15
E-mail: mail@dvcas.dk
Web: www.dvcas.dk